PRODUCT No. 7291

Aluminium truck for manipulation – perforated walls

(Ilustrative photograph)

Technical data

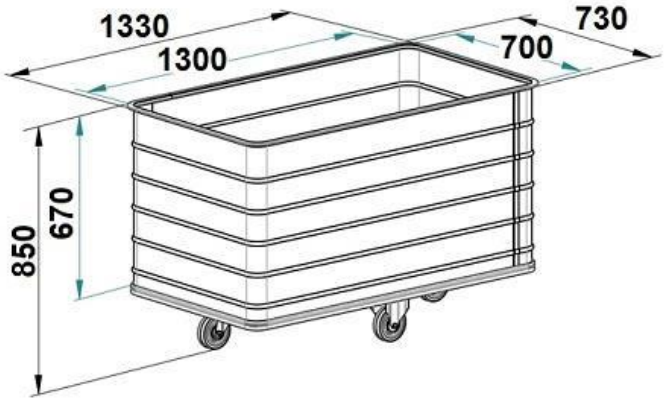

Material	Aluminium
Capacity	610 l
Weight	25 kg
Wheels (diameter)	125 mm
Length (inner/outer)	1300 / 1330 mm
Width (inner/outer)	700 / 730 mm
Height (inner/outer)	670 / 850 mm

Attributes

- Made of aluminium.
- Light aluminium design reinforced with longitudinal bulges.
- Castors for easy handling and manoeuvrability.
- Used for transport and manipulation with light and bulky material, parts or waste.

Product purpouse

- Designed for transportation and manipulation of light and bulky material.

Additions

- Possible to be delivered in full or perforated design.
- Possible to be delivered with two possible wheel positions: Standard A, custom B.

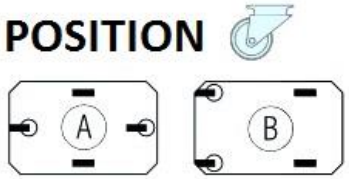

Tel.: 416 823 181
E-mail: info.mevatec@meva.eu

MEVA-TEC s.r.o.
Chelčického 1228
413 01 Roudnice nad Labem - Bezděkov