# PRODUCT No. 4926

# Bench under the wardrobe – 750 mm

(Ilustrative photograph)

## Technical data

| | |
|---|---|
| Material | Steel sheet |
| Weight | 11 kg |
| Width | 750 mm |
| Depth | 800 mm |
| Height | 375 mm |

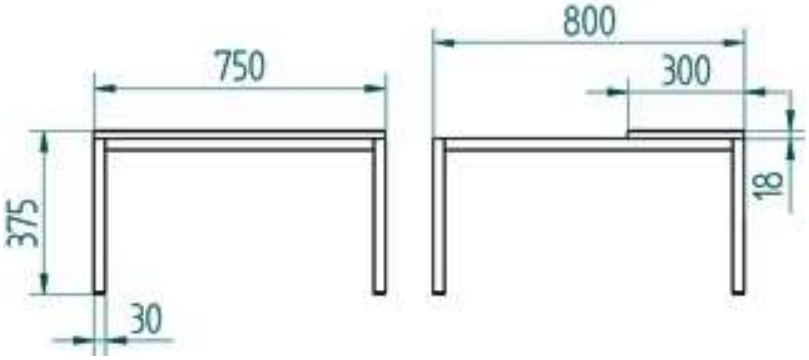


## Attributes

- Made of steel sheet.
- Designed for wardrobes.
- Extends usage of wardrobes.

## Color variations

- Grey (RAL 7035).

## Product purpouse

- Designed for wardrobes of type 4904 and 4905.

Tel.: 416 823 181
E-mail: info.mevatec@meva.eu

MEVA-TEC s.r.o.
Chelčického 1228
413 01 Roudnice nad Labem - Bezděkov